FEDERATION OF PILING SPECIALISTS

BENTONITE SUPPORT FLUIDS
IN
CIVIL ENGINEERING

January 2006

© Federation of Piling Specialists – January 2006 (2nd edition)
(first published April 2000)

CONTENTS

		Page
Acknowledgements		1
Preface		2
1	The use of bentonite support fluids in civil engineering	3
2	The production and properties of bentonite powder	3
3	Bentonite specifications	5
4	Bentonite slurry properties	6
4.1	The effect of slurry properties on required functions	7
4.1.1	Excavation support	7
4.1.2	Retention within the excavation	8
4.1.3	Suspension of solids	8
4.1.4	Displacement by concrete	8
4.1.5	Cleaning	9
4.1.6	Pumping	9
5	Preparation of bentonite slurry	9
6	Cleaning bentonite slurry	10
7	Re-use of bentonite slurry	11
8	Disposal of bentonite slurry	12
9	Testing	13
9.1	Density	14
9.1.1	Test procedure	14
9.1.2	Calculation of slurry density for mix proportions	15
9.1.3	Grain specific gravity of the bentonite powder	15
9.2	Sand content	16
9.2.1	Test procedure	16
9.3	Rheological measurements	17
9.3.1	Test procedure for the electrically driven viscometer	17
9.3.2	Test procedure for the hand cranked viscometer	18
9.3.3	Checking viscometers	19
9.3.4	Calculation of results	19
9.4	Flow cones	20
9.4.1	The Marsh funnel	20
9.5	The Shearometer	21
9.6	Ph	22
9.6.1	Test procedure	22
9.6.2	Typical pH values	23
9.7	Filtrate loss	23
9.7.1	Test procedure	24
9.7.2	Test results	25
9.8	Bleeding	25
9.9	Moisture content	25
9.10	Water compatibility testing	26
10	Bibliography	27

© Federation of Piling Specialists – January 2006 (2nd edition)
(first published April 2000)

ACKNOWLEDGEMENTS

The Federation of Piling Specialists acknowledges the contributions made in the preparation of this document by the following members of the Working Group:

D. J. Ball	Steetley Bentonite and Absorbents Limited
M. T. Hutchinson	Kvaerner Technology Limited
S. A. Jefferis	Golder Associates (UK) Limited
P. G. Shotton	Kvaerner Cementation Foundations Limited
L. Stansfield *(Chairman)*	Bachy Soletanche Limited
A. J. Wills	Kvaerner Technology Limited

and also the assistance provided by Dr. M. Stocker, Chairman of the Technical Working Group of the European Federation of Foundation Contractors and Chairman of CEN/TC 288: Special Geotechnical Works.

© Federation of Piling Specialists – January 2006 (2nd edition)
(first published April 2000)

PREFACE

Bentonite is the name used for a range of clays that can swell and gel when dispersed in water. The name "bentonite" originates from the discovery of this type of clay near Fort Benton, USA, in the 19th Century. This was a natural sodium bentonite, and has been mined extensively for many years in Wyoming and Dakota for oil well drilling applications.

Bentonite is now used extensively throughout the world in civil engineering, but the cost of transporting original "Wyoming" bentonite from the USA has led to the use of alternatives from other sources. A large proportion of bentonite now used is therefore from other parts of the world.

It is important to recognise that the properties of bentonites from different sources vary, and to take these variations into account when deciding on the suitability of a particular bentonite for a specific purpose.

The purpose of this document is to provide information that will enable a decision to be made as to whether or not a particular bentonite will produce a satisfactory support fluid, and to give guidance on the preparation, use, re-use and disposal of the bentonite slurry, and also on methods of testing.

Since the first edition of this guide the use of polymer support fluids as an alternative to bentonite has become relatively common. Polymer support fluids are fundamentally different to bentonite support fluids and their scope is too great to be covered in this guide.

© Federation of Piling Specialists – January 2006 (2nd edition)
(first published April 2000)

© Federation of Piling Specialists – January 2006 (2nd edition)
(first published April 2000)

1 THE USE OF BENTONITE SUPPORT FLUIDS IN CIVIL ENGINEERING

Bentonite support fluids are widely used in civil engineering.

One of their main uses is to support the sides of panel excavations for diaphragm walls. In this application, the bentonite must be capable of forming a barrier or "filter cake" on the sides of the excavations to prevent loss of fluid into the ground and provide a surface layer against which the pressure of the fluid can act in order to resist external pressures from the soil and groundwater.

Bentonite support fluids are also widely used in the construction of large diameter bored piles. This application is similar to that for diaphragm wall construction except for the shape of the excavation.

Small diameter boreholes for site investigation work or other purposes are often bored through unstable strata using bentonite support fluid as an alternative to temporary casings.

Another widely used application is in the construction of cut-off walls below ground to form barriers to groundwater or to surround areas of contaminated land where leachates must be contained. In this application, cement and/or other materials are added to the bentonite to form a slurry which remains fluid for several hours before setting to form a relatively soft barrier wall. A thin flexible membrane is sometimes inserted into the slurry in the excavation before it sets. This application is not treated in this document.

Bentonite support fluids are also used in some cases to support the excavation face in front of tunnelling machines and to transport the cuttings to desanding equipment where they are removed before the fluid is re-circulated for further use.

The properties of bentonites from different sources vary, and it is important to understand that a property which may be required for one application may not be required for another. For example, gel strength is important if material has to be kept in suspension while the fluid is at rest, but may not be important if the fluid is agitated continuously in a circulatory system. Differences in the properties of available bentonites should therefore be considered before deciding which bentonite to use for a particular application.

Polymer support fluids, as an alternative to bentonite, have grown in usage for bored piling operations in recent years. They behave and have different properties to to bentonite support fluids and their scope is too great to be covered in this guide. Engineers may wish to consider their use, but should always seek the necessary specialist advice on their usage and application.

2 THE PRODUCTION AND PROPERTIES OF BENTONITE POWDER

Commercial bentonites are hydrated alumino silicates, and comprise predominantly the mineral montmorillonite. The name "montmorillonite" is derived from the discovery of this type of clay near Montmorillon in France.

© Federation of Piling Specialists – January 2006 (2nd edition)
(first published April 2000)

Bentonite occurs as a clay ore containing up to 50 % moisture. Commercially viable deposits consist of accessible clay seams, low in accessory minerals, which can be cleanly worked to minimise unwanted inclusions such as sand. The characteristics of the clay vary, and selection is based on factors such as yield and gelling ability.

There are three common types of bentonite, namely:

- Natural sodium bentonite
- Natural calcium bentonite
- Sodium-activated bentonite

All bentonites have a capacity to exchange cations which is much greater than that of other clays such as china clay, ball clays and attapulgite.

Natural sodium bentonite is characterised by very high swelling ability, high liquid limit and low filter loss. This bentonite was used as the standard by which all other bentonites were measured for many years. The predominant exchangeable cation in natural sodium bentonite is the sodium cation but there may also be significant amounts of other cations present.

Natural calcium bentonite**,** where calcium is the predominant exchangeable cation, is mined world-wide. It has much lower swelling ability and liquid limit, and much higher filter or fluid loss than natural sodium bentonite.

Sodium-activated bentonite is produced by the addition of soluble sodium carbonate to calcium bentonite. This effects a base exchange on the surfaces of the clay particles, replacing calcium ions with those of sodium. The result is a bentonite exhibiting many of the typical characteristics of a natural sodium bentonite.

Most bentonites used in civil engineering to produce support fluids are sodium-activated. Natural sodium bentonite is rarely used because of its high cost. Natural calcium bentonite is usually not suitable for this purpose.

Processing methods used in the production of sodium-activated bentonite depend on the deposit and its geographical location. They could include several of the following:

- Selective mining.
- Field laying and rotavation. This is a process used in hot, dry climates where the bentonite is spread out and rotavated with the addition of sodium carbonate.
- Crushing to 50 mm maximum size at the production plant.
- Extrusion. In wet climates, where field laying is not possible, a blend of raw bentonite and sodium carbonate is extruded to promote activation.
- Drying by rotary louvre drier to optimum moisture contents in the range 11 to 22 % of dry weight.
- Milling to a particle size that promotes good powder flow but does not diminish clay performance. Generally, powders with 95 % of particles less than 150 microns (dry sieve basis) are used.

© Federation of Piling Specialists – January 2006 (2nd edition)
(first published April 2000)

The rheological characteristics of bentonites (i.e. their behaviour as bentonite slurries when mixed with water) influence their suitability for use in civil engineering applications. Natural sodium bentonite and sodium-activated bentonite, when dispersed in water under conditions of high shear mixing, break down into minute plate-like particles, negatively charged on their surfaces and positively charged along their edges. Typically, if 3% or more bentonite powder is dispersed in water, a viscous slurry is formed which is thick when allowed to stand but thin when agitated. This phenomenon is known as thixotropy, and results from the orientation of the plate-like particles within the slurry. When the slurry is allowed to stand, the plate-like particles become orientated as shown in Figure 1(a). Electrical bonding forces between the particles form an interlocking structure which causes the slurry to gel. When the gel is agitated, the electrical bonds are broken and the slurry becomes fluid, with the particles orientated in random fashion as shown in Figure 1(b).

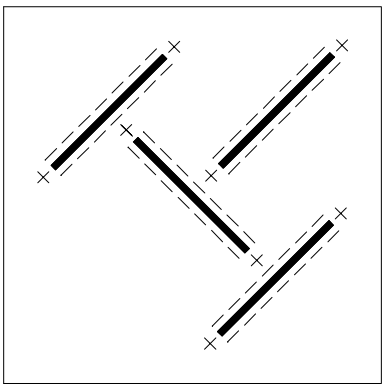

Fig. 1(a)

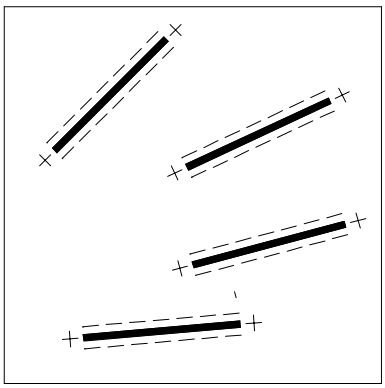

Fig. 1(b)

3 BENTONITE SPECIFICATIONS

Bentonite powder is normally satisfactory for use in support fluids in civil engineering if it complies with one of the following specifications:

- API Specification 13A, Fifteenth Edition, May 1, 1993, Section 6 (OCMA grade bentonite)
- The Engineering Equipment and Materials Users Association (EEMUA) Publication No. 163 entitled “Drilling Fluid Materials”, last reprinted in 1988.

The API Specification and the EEMUA Specification differ slightly in some respects. The main differences in the specifications are in the requirements for the rheological properties and filtrate loss of the slurry. The rheological properties of the slurry at different rates of shear are determined using a direct reading viscometer. Filtrate loss is determined using a filter press. Test methods are described in detail in Section 8.

Tests to determine the properties of a bentonite slurry in accordance with the API Specification are carried out on a 6.4% suspension of bentonite in deionized water, aged for up to 16 hours. This specification requires a minimum viscometer dial reading of 30 at

© Federation of Piling Specialists – January 2006 (2nd edition)
(first published April 2000)

600 rpm, and a maximum Yield Point/Plastic Viscosity Ratio of 6. Expressed another way, this equates to a minimum dial reading of 30 at 600 rpm, and a maximum dial reading of 0.875 times the 600 rpm reading at 300 rpm. The filtrate volume must not exceed 16 ml in 30 minutes.

The EEMUA Specification expresses the rheological properties in terms of Yield (not to be confused with Yield Point). This specification requires the yield of a bentonite/distilled water slurry, aged for 24 hours and having an apparent viscosity of 15 cP (centipoise), to be not less than 16 m^3/tonne. An Apparent Viscosity of 15 cP equates to a 600 rpm reading of 30, and a Yield of 16 m^3/tonne equates to a 6.4% bentonite suspension, which is the same as that used in the API Specification. Thus, the requirement of the EEMUA Specification can be re-written as follows:

- A 6.4% suspension of bentonite in distilled water, aged for 24 hours, should have a minimum viscometer dial reading of 30 at 600 rpm.

This is the same as the API Specification except that the API Specification only requires the bentonite suspension to be aged for up to 16 hours. The EEMUA Specification does not specify a maximum Yield Point/Plastic Viscosity Ratio therefore does not require a viscometer dial reading to be taken at 300 rpm. The filtrate volume is measured on a 7.5% suspension, aged for 24 hours, and should not exceed 15 ml in 30 minutes.

The maximum moisture content of the bentonite powder is specified as 13% in the API Specification and 15% in the EEMUA Specification. This difference will not affect the performance of the bentonite, therefore the requirement of the API Specification could, if necessary, be relaxed to 15% to accommodate some bentonites in common use.

Both Specifications require the residue greater than 75 microns (US standard sieve No. 200) not to exceed 2.5% by weight. The EEMUA Specification has the additional requirement that the amount of bentonite passing through a dry 100 mesh (150 micron) screen shall be at least 98% by weight.

Where applicable, testing procedures should be carried out in accordance with the latest edition of API Publication RP13B "API Recommended Practice - Standard Procedure for Testing Drilling Fluids".

4 BENTONITE SLURRY PROPERTIES

Bentonite slurries of the type normally used to support excavations, can vary widely in their physical and chemical properties. They must, however, perform the following functions:

a) Support the excavation by exerting hydrostatic pressure on its walls
b) Remain in the excavation, and not flow to any great extent into the soil
c) Suspend detritus and prevent sludgy layers building up at the base of the excavation

© Federation of Piling Specialists – January 2006 (2nd edition)
(first published April 2000)

In addition, they must allow:

d) Clean displacement by concrete, with no significant interference with the bond between reinforcement and set concrete
e) Cleaning to remove suspended detritus, by passing through screens and hydrocyclones, in preparation for re-use
f) Easy pumping

In general, items a) to c) require thick, dense slurries, while items d) to f) need very fluid slurries. There are therefore conflicting requirements which must be resolved before an acceptable specification for slurry properties can be drawn up.

In the following paragraphs, consideration is given to the effect of slurry properties on each function. This will assist in the establishment of limits for most of the slurry properties and in defining a slurry which is acceptable for each function and also for the overall excavation process.

The primary aim of any bentonite slurry specification must be to ensure that the slurry is capable of fulfilling functions a) to d) without deleterious effects on the finished pile, wall or other form of construction. In addition, for economic and environmental reasons, the maximum re-use and minimum disposal of used slurry are required. The specification for the slurry properties should be as wide as possible, consistent with achieving satisfactory results. In most cases, for any given function, maximum and minimum values can be chosen which then enable limits to be derived as the basis for the specification.

4.1 The effect of slurry properties on required functions

4.1.1 Excavation support

In order to exert stabilising pressure on permeable walls of an excavation, bentonite slurry must form a seal on or near the surface of the soil. This avoids loss of slurry into the soil, with consequent increase in pore pressure and reduction in shear strength, and enables the slurry to exert its maximum stabilising effect.

The seal can be formed by three different mechanisms:

- Surface filtration
- Deep filtration
- Rheological blocking

Surface filtration occurs when a filter cake is formed by the bridging of hydrated bentonite particles at the entrance to the pores in the soil, with negligible penetration of the bentonite into the soil. During and after its formation, water percolates through the filter cake from

© Federation of Piling Specialists – January 2006 (2nd edition)
(first published April 2000)

the slurry into the soil. Water lost in this way is referred to as fluid loss, and reduces in relation to the square root of time.

Deep filtration occurs when slurry penetrates into the soil, slowly clogging the pores and building up a filter cake within them. In this case, the seal may penetrate into the soil about 40 to 50 mm.

In both surface filtration and deep filtration, the concentration of bentonite in the filter cake is greater than in the slurry (typically 15% for a slurry containing 5% bentonite).

Rheological blocking occurs when slurry flows into the soil until it is restrained by its shear strength. In this case the slurry may flow several metres into the soil.

Of these three mechanisms, surface filtration is much to be preferred, since the seal is formed very rapidly with little or no penetration of bentonite into the soil.

4.1.2 Retention within the excavation

Retention of bentonite slurry in excavations in clay, silt or sand should not present any problems provided the bentonite slurry has a minimum Marsh funnel viscosity of about 32 seconds (946 ml test volume). Excavations in gravel may require a Marsh funnel viscosity of 40 to 50 seconds to limit the filtration depth into the soil. A Marsh funnel viscosity in excess of 50 seconds will make desanding operations more difficult, and may inhibit complete displacement of the bentonite slurry by concrete in excavations containing complex steel reinforcement.

It may not be possible to retain bentonite slurry in very open ground containing cobbles and boulders unless special measures are taken. These may include the addition of sand to the bentonite to assist the blocking mechanism, or the use of bentonite-cement slurry or weak concrete to seal off strata where losses occur.

4.1.3 Suspension of solids

While excavating under bentonite, fine soil particles will accumulate in the slurry. If this material is to be kept in suspension, for example to prevent the formation of a layer of sediment at the base of a pile bore, the bentonite slurry should have a high viscosity under quiescent conditions. A measure of this can be obtained from the 10 minute gel strength which can be determined when testing the rheological properties of the slurry, or other testing method for gel strength.

4.1.4 Displacement by concrete

The bentonite slurry should have a low viscosity and contain the minimum possible amount of suspended soil particles if it is to be displaced by concrete placed through a tremie pipe or by pumping. It is therefore normal practice to use desanding equipment and, if necessary, desilting equipment to remove soil particles from the slurry, or to replace the

© Federation of Piling Specialists – January 2006 (2nd edition)
(first published April 2000)

contaminated slurry with fresh or reconditioned slurry before the concrete is placed. Sometimes there can be a build-up of fine silt and clay particles in the slurry which cannot be removed by conventional desanding or desilting equipment. A practical upper limit has therefore to be set on the density of the slurry, after which it is considered to be unsuitable for re-use.

4.1.5 Cleaning

Suspended soil particles can be removed from a slurry more easily if the slurry has a low viscosity. Desanding becomes increasingly difficult as the viscosity of the slurry increases, and also as the amount of suspended solids increases.

4.1.6 Pumping

Pumping bentonite slurry over distances of several hundred metres can become difficult and inefficient if the viscosity of the slurry is too high or the slurry contains a large amount of suspended solids. The slurry should have low viscosity to minimise the energy required for pumping but should have sufficient gel strength to prevent soil particles from settling out in the delivery lines if pumping is interrupted.

5 PREPARATION OF BENTONITE SLURRY

When a bentonite slurry is being prepared, the objective is to achieve maximum hydration of the bentonite. Potable quality fresh water from a mains supply should be used in the mixing process to achieve the best results. If there is any doubt about the quality of the water, a chemical analysis should be carried out to determine its suitability or the need for chemical treatment before use.

Salt water should not be used in the preparation of bentonite slurry because there is no simple chemical treatment available to remove the sodium chloride.

The presence of calcium or magnesium in fresh water will inhibit dispersion of the bentonite powder, but it is a relatively simple matter to treat these chemically before the water is used. Calcium can be removed by soda ash (sodium carbonate) which precipitates out the calcium as calcium carbonate. Care must be taken not to over-treat the water, since this will provide an excess of carbonate ions which will hinder hydration. Magnesium can be treated with caustic soda (sodium hydroxide) which can also be used to provide some alkalinity to assist in dispersing the bentonite when it is mixed.

Bentonite slurry can be prepared either in batches or in a continuous process, depending on the type of equipment used. The bentonite powder must be added to the mixing water gradually in order to ensure that all the particles are wetted and do not clump into partially hydrated balls. Typically, the bentonite powder is added through a simple venturi hopper or directly into a high shear mixer. The mixing equipment must generate sufficient shear to ensure that all the individual bentonite particles are dispersed in the mixing water. The quantity of bentonite powder to be added to the mixing water depends on the quality of the

© Federation of Piling Specialists – January 2006 (2nd edition)
(first published April 2000)

bentonite and the required viscosity of the slurry. For most applications, concentrations between 4% and 6% by weight are typical.

Following dispersion in the mixing water, the bentonite particles absorb water and swell. The initial properties of the slurry will depend on the efficiency of the mixing process. Thus, the greater the agitation and the longer the mixing time, the higher will be the initial viscosity and gel strength. After mixing, the slurry is normally stored in tanks or lagoons where it is kept agitated by circulating through pumps or by injecting compressed air while further hydration takes place. Hydration is time dependent and will continue for many days, but the rheological properties of the slurry will approach limiting values within a few days after mixing. The slurry is normally stored for at least 12 hours before being used, but it can be used immediately after mixing if necessary, provided tests show that its properties are satisfactory.

Satisfactory results should be obtained if the properties of the fresh bentonite slurry comply with the "fresh" column in Table 1.

TABLE 1 : CHARACTERISTICS FOR BENTONITE SUSPENSIONS

Property	Units	Stages			Test equipment
		Fresh	Ready for re-use	Before concreting	
Density	g/ml	< 1.10	< 1.25	< 1.15	Mud balance
Marsh viscosity (946 ml)	sec	32 to 50	32 to 60	32 to 50	Marsh funnel
Fluid loss (30 min)	ml	< 30	< 50	n.a.	Filter press
pH		7 to 11	7 to 12	n.a.	pH meter
Sand content	%	n.a.	n.a.	< 4	Sand content set

n.a. : not applicable

In order to keep sand particles in suspension, it is necessary for the bentonite slurry to have sufficient gel strength. The gel strength can be checked by using a rotational viscometer or other suitable equipment.

6 CLEANING BENTONITE SLURRY

Upon completion of an excavation, the slurry will contain soil particles held in suspension which may include clay, silt, sand and fine to medium gravel. If concrete is to be placed through a tremie pipe into the excavation, a sample of the slurry should be taken from the bottom of the excavation and checked for compliance with the values in the "before concreting" column in Table 1.

If the sand content is greater than 4%, slurry should be removed from the bottom of the excavation by means of a pump or air-lift, while clean slurry is pumped into the top of the excavation to maintain the required level. The slurry from the excavation can be pumped directly to a desander and then returned to the excavation in a closed circuit, or can be pumped to a lagoon for subsequent desanding and replaced by clean slurry from storage tanks or a separate storage lagoon. Up to 6% sand and a maximum density of 1.20 g/ml

© Federation of Piling Specialists – January 2006 (2nd edition)
(first published April 2000)

may be permitted in special cases such as unreinforced walls, but it is preferable for the sand content to be reduced as far as possible before the concrete is placed in order to reduce the risk of blockages in the pipes when the slurry is being pumped back to the mixing station during the concreting operation.

Several proprietary makes of desander are available on the market, all employing similar principles. The bentonite suspension is first passed over a coarse vibrating screen to remove large solids, typically greater than 5 mm. It is then pumped to a main hydrocyclone (typically 250 - 450 mm dia.) where suspended solids, down to fine sand-size, are concentrated and discharged as the underflow on to a vibrating dewatering screen. This screen effectively dries the sand, which is then discharged on to a spoil heap. Most desanders have a facility to recover the fluid, which passes through the dewatering screen, and pump it to a secondary, smaller hydrocyclone which concentrates the coarse silt particles in the fluid and discharges them back on to the sand bed on the dewatering screen. The size of the hydrocyclone dictates both its flow capacity and the size of solids it will remove. The smaller the hydrocyclone, the lower its flow capacity, but the smaller the particle size it can remove.

The bentonite slurry which overflows from the hydrocyclones contains a much lower concentration of suspended solids than the feed material, and may be sufficiently clean to be re-used after passing through the hydrocyclones only once. However, as the weight of suspended solids in the feed material increases and the viscosity of the fluid increases, the ability of the hydrocyclones to clean the slurry reduces, therefore it may be necessary for the slurry to circulate two or three times through the desander before it is sufficiently clean to be re-used. The viscosity of the slurry can also be reduced by the use of suitable admixtures.

After desanding, the slurry may still contain silt and clay-size soil particles which will increase its density. During the excavation process, heavy slurry is lost and replaced by lighter slurry, which may result in the density of the slurry increasing to a certain level above which no further increase occurs. Should the build-up of fine soil particles continue and become a serious problem, there are two possible solutions: either dispose of the slurry or use a desilter or centrifuge to remove silt-size particles. This latter option may be relatively expensive, but may still be preferable to disposal of large quantities of slurry. It is not practical to remove clay-size particles therefore, should these continue to build up, increasing the density of the slurry to more than the allowable limit, disposal is the only practical solution.

7 RE-USE OF BENTONITE SLURRY

Bentonite slurry can be re-used repeatedly provided its properties are carefully monitored and kept under control.

Whatever system of excavation is used, loss of slurry will occur. Some will be excavated with the soil, some will permeate into the strata, and some will become too contaminated

© Federation of Piling Specialists – January 2006 (2nd edition)
(first published April 2000)

for re-use and have to be taken off site. Also, some slurry may be left in the excavation if it is not filled with concrete to ground level. The slurry which is lost is replaced by fresh slurry which is blended with the used slurry to top up the system. Satisfactory results should be obtained if the properties of blended fresh and used slurry comply with the "ready for re-use" column in Table 1.

Bentonite powder may have to be added to the slurry or admixtures may have to be introduced to adjust its properties. These may include sodium bicarbonate or soda ash to control the pH, organic thinners or polyphosphates to reduce viscosity, and sodium carboxymethylcellulose (CMC) to reduce fluid loss.

The pH of the slurry will increase if it becomes contaminated by cement, and will reduce if contaminated by acids or acidic groundwater. In both cases, there will be an increase in viscosity accompanied by an increase in fluid loss, therefore the pH should be adjusted to its original value before any other tests are carried out. This can be achieved by the addition of sodium bicarbonate if the pH has to be reduced, or soda ash if it has to be increased.

After adjustment of the pH, the next step is to check the density, Marsh viscosity and fluid loss.

If the density rises above the acceptable limit due to the inclusion of clay and silt-size particles, and cannot be reduced by the equipment available on site, the slurry must be taken off site for disposal.

The Marsh viscosity will increase if the slurry contains an accumulation of clay and silt-size particles, and will increase still further if contamination causes flocculation to occur. In their dispersed state in the fluid, the individual clay particles are held apart by water cushions but, when contamination occurs, the water cushions shrink and the particles move closer together, causing flocculation. The flocs form a highly permeable filter cake accompanied by high fluid loss which may result in partial or complete collapse of an excavation. Flocculation can often be corrected by the addition of organic thinners or polyphosphates, but it may be necessary to analyse a sample of the filtrate water to identify the contaminant if the problem persists.

It is important to carry out regular filtrate tests on the slurry to check the fluid loss, because this can increase with continued use of the slurry, even though other properties may remain within acceptable limits.

8 DISPOSAL OF BENTONITE SLURRY

Under current UK waste regulations bentonite is classified as a *non-hazardous* waste. Usually, the cheapest acceptable method of disposal of bentonite slurry is to place it in an approved landfill tip, with transportation by a *licenced carrier*. However the availability of approved tips is limited, and many tip operators will only accept limited daily quantities (generally related to how much dry solid waste they are handling). Additionally, in wet weather, some tips will not accept bentonite slurry for disposal.

© Federation of Piling Specialists – January 2006 (2nd edition)
(first published April 2000)

Alternative methods which are available but, to date, not cost effective are:

(i) Continuous belt filtration units which produce a clay product with a solids content of approx. 65%.

(ii) Decanting centrifuge units, producing a similar product to the above.

(iii) Flocculation of the bentonite, followed by the addition of cement to form a clay-like product, generally with a solids content of approximately 25%.

The purpose of these forms of treatment is to allow the products to be disposed of as solid waste.

Waste disposal regulations have been the subject of significant changes in recent years and users of this guide should always ensure that any transportation or disposal is in compliance with the latest regulations.

9 TESTING

Much of the early technology for civil engineering slurries was developed from oil well drilling practice, and many of the test procedures have also been borrowed from the oil industry. Rogers (1988) provides a useful account of oil well drilling fluids and test procedures.

The following paragraphs set out a range of procedures that can be used for testing bentonite excavation slurries. Some of these tests are more appropriate to the research laboratory than to a construction site therefore, in selecting parameters to be measured on site it is important to consider the following questions:

- Is the test parameter relevant to the site situation?
- Does the test procedure produce repeatable results so that unacceptable materials can be easily identified?
- Is the test equipment robust and suitable for site use?
- Can the test be performed reasonably rapidly?

It is not suggested that all the tests detailed below are appropriate for use on all sites. Important parameters which may need to be tested include:

- Some measure of rheology to ensure that the slurry is appropriately fluid.
- The density of the slurry in the excavation prior to concreting to ensure satisfactory displacement by the concrete.
- The sand content, if the slurry is to be cleaned and re-used (slurries with high densities but low sand contents may be little improved by conventional cleaning plants).
- The pH of the fresh bentonite slurry as a quality control measure (the result should be consistent for a particular source/type of bentonite but may vary between sources).
- The pH of the slurry in use to check for cement or other contamination.

© Federation of Piling Specialists – January 2006 (2nd edition)
(first published April 2000)

- Filtrate loss of the slurry to check its ability to form a seal on or near the surface of the soil in the excavation.

9.1 Density

For excavation slurries, the standard instrument for density measurement is the mud balance. This is an instrument similar to a steelyard, except that the scale pan is replaced by a cup. The instrument thus consists of a cup, rigidly fixed to a scale arm which has a sliding rider and counterweight, and is supported on a fulcrum, as shown in Figure 2.

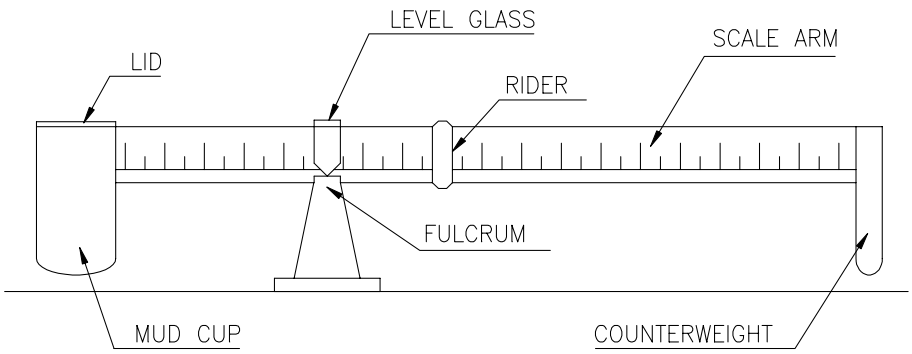

Fig. 2 Mud balance

9.1.1 Test procedure

(i) Check that the instrument is thoroughly clean and dry, paying particular attention to the inside of the cup.
(ii) Fill the cup with the slurry to be tested. Try to avoid trapping air bubbles. If necessary, tap the cup a few times to release any bubbles.
(iii) Insert the lid with a firm twisting movement to ensure that it is properly seated and that no air is trapped under it. Make sure that some excess slurry has been squeezed out of the central vent hole in the lid. If none has, remove the lid, top up with slurry and repeat the seating process.
(iv) With a finger over the vent hole carefully dry the outside of the cup. Check that the vent hole is still full of slurry. If not, top up and repeat.
(v) Seat the instrument on the fulcrum and adjust the rider until the beam is in balance, as shown by the level bubble.
(vi) Read off the slurry specific gravity against the calibration mark on the rider.

To familiarise oneself with the instrument, several tests can be done on a single batch of clean slurry. The results should agree to 0.01. With contaminated slurries, it may be difficult to get good repeatability, as the spoil may tend to settle. Such slurries should be well stirred before a sample is taken for testing.

© Federation of Piling Specialists – January 2006 (2nd edition)
(first published April 2000)

The calibration of the instrument should be checked regularly. The procedure is simply to test a sample of clean water. This should show a density in the range 0.995 to 1.005 g/ml. If the reading is outside this range, set the rider to a density of 1.000 and adjust the counterweight until the beam is in balance. The counterweight is at the far end of the beam from the cup, and usually consists of a small recess containing lead shot, closed by a screw plug.

As the balance was developed for the oil industry, the range of the instrument is rather wider than is necessary for civil engineering work (typically 0.72 to 2.88). Construction slurries usually have specific gravities in the range 1.0 to 1.4. The smallest division of the scale is 0.01 but, with care, the instrument can be read to 0.005 though the repeatability between readings is seldom better than 0.01. A resolution of +/- 0.005 represents a range of solids contents of the order of +/- 8 kg of bentonite per cubic metre of slurry (see Section 8.1.2, Equation 2) and thus will not allow the bentonite content of a fresh slurry to be estimated to an accuracy better than about +/- 20%. The mud balance can therefore only be used to identify gross errors in batching, and is not suitable for accurate quality control work.

It should be noted that the instrument has three scales in addition to the specific gravity scale. These are: pounds per cubic foot, pounds per U.S. gallon (0.833 of an Imperial gallon) and pounds per square inch per 1000 foot depth (a one thousand foot column of water exerts a pressure of 433 psi). In general none of these other scales is useful for civil engineering work, and only the specific gravity scale should be used.

9.1.2 Calculation of slurry density for mix proportions

The density of a slurry, ρ_s is related to the concentration, C of bentonite by weight of mix water as follows:

$$\rho_s = \rho_w (1 + C) / (C/G_p + 1) \qquad (1)$$

where ρ_w is the specific gravity of the mixing water (assumed to be 1.0) and G_p is the grain specific gravity of the bentonite powder used to prepare the slurry (see Section 9.1.3)

If the concentration, C_s is expressed as kilograms of bentonite per cubic metre of final slurry, then the formula becomes:

$$\rho_s = \rho_w + C_s (1 - 1/G_p) \qquad (2)$$

9.1.3 Grain specific gravity of the bentonite powder

If the density of a bentonite slurry is to be calculated from the clay content, it is necessary to know the grain specific gravity of the clay. Typically, this may be in the range 2.5 to 2.8 for the oven dry powder but bentonites, as supplied, will contain some moisture therefore the effective grain specific gravity of the powder will be less than that of the oven dry powder.

© Federation of Piling Specialists – January 2006 (2nd edition)
(first published April 2000)

If the grain specific gravity of the oven dry powder is G_s and that of the bentonite, as supplied, is G_p then:

$$G_p = (1 + m_c) / (1/G_s + m_c) \qquad (3)$$

Where m_c is the moisture content of the bentonite powder by oven dry weight. If $G_s = 2.7$ and $m_c = 10\%$, then $G_p = 2.34$ and thus it can be seen that the effect of moisture content on the grain specific gravity is significant.

It should be noted that the above formula has been derived from a simple rule of mixtures and assumes that the moisture in the bentonite has the same density as free water. In practice this may not be strictly true for water sorbed on to the particle surfaces.

9.2 Sand content

During excavation with a bentonite slurry, the density will increase due to suspension of spoil. The density of a contaminated slurry provides a measure of the total amount of spoil in the slurry but no information as to whether this is sand, silt or clay

The sand content set is designed to measure the bulk volume of sand (strictly material coarser than 200 mesh U.S., 0.075 mm, 75 microns) in a given volume of slurry. The apparatus consists of a tapered graduated tube, a small 200 mesh U.S. sieve and a funnel, as shown in Figure 3.

9.2.1 Test Procedure

(i) Carefully fill the graduated measuring tube with slurry to the "mud to here" line.

(ii) Add sufficient water to fill the tube to the "water to here" line. The exact amount of water is not important. Cover the mouth of the tube and shake vigorously.

(iii) Pour the mixture on to the screen a little at a time. After each addition, wash the bulk of the fines through before adding more slurry (if the whole batch of slurry is poured on to the screen at once, it may block it and make subsequent washing difficult). Wash any remaining material out of the tube and on to the screen. Wash the residue on the screen until free of all bentonite.

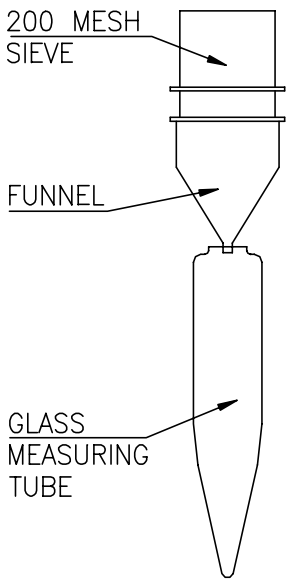

Fig. 3 Sand content set

(iv) Fit the funnel over the screen, invert it, and put the tip of the funnel into the tube. Wash the residue back into the tube.

© Federation of Piling Specialists – January 2006 (2nd edition)
(first published April 2000)

(v) Record the volume of residue in the tube.

The result of the test is quoted as the sand content (percent bulk volume of sand by volume of slurry).

9.3 Rheological measurements

The most common instrument used for measuring actual rheological parameters (rather than ranking slurries, for example, by flow time from a funnel) is the Fann viscometer (sometimes referred to as a rheometer), as shown schematically in Figure 4. Two general versions of the instrument are available: electrically driven and hand cranked. All versions of the instrument can be operated at 600 and 300 rpm, and have a handwheel so that the bob can be slowly rotated for gel strength measurements. Some electrically driven versions also have additional fixed speeds of 200, 100, 6 and 3 rpm, or variable speed motors. For all versions of the instrument, there is a central bob, connected to a torque measuring system, and an outer rotating sleeve. The gap between bob and sleeve is only 0.59 mm, therefore it is necessary to screen spoil contaminated slurries before testing. The full test procedure is given in API Publication RP 13B "API Recommended Practice - Standard Procedure for Testing Drilling Fluids".

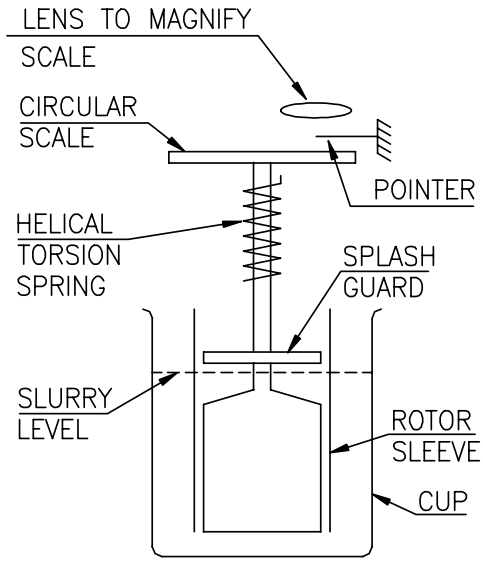

Fig. 4 Schematic diagram of Fann viscometer

Fundamentally, for both types of instrument, four measurements can be made:

(i) The dial reading at a rotational speed of 600 rpm (the 600 rpm reading)
(ii) The dial reading at a rotational speed of 300 rpm (the 300 rpm reading)
(iii) The 10 second gel strength, obtained by slowly rotating the gel strength knob until the gel breaks after the slurry has been agitated at 600 rpm and then left to rest for 10 seconds
(iv) The 10 minute gel strength, determined as for the 10 second gel strength but after a rest period of 10 minutes

9.3.1 Test procedure for the electrically driven viscometer

The test procedure for the electrically driven instrument is as follows:

(i) Fill the mud cup with slurry and place it on the platform of the instrument. Raise the platform so that the surface of the slurry is level with the engraved line on the rotor.

© Federation of Piling Specialists – January 2006 (2nd edition)
(first published April 2000)

(ii) Set the instrument to rotate at 600 rpm. If any clicking or grinding sounds are heard, it means that the sample contains coarse material which is being ground between the rotor and the bob. The instrument must be stopped immediately and cleaned, and the slurry sieved on a 52 mesh B.S. sieve (i.e. approx. 0.3 mm or finer) before re-testing. Most slurries taken direct from the excavation will need to be screened before testing.

(iii) Leave the instrument running at 600 rpm until a steady reading is obtained. Record this reading as the 600 rpm reading.

(iv) Shift the speed to 300 rpm and again record the steady reading.

(v) To obtain the ten second gel strength, set the instrument to 600 rpm, run it for ten seconds, stop it and allow the slurry to stand undisturbed for 10 seconds. Then slowly and steadily rotate the larger handwheel on top of the instrument so as to produce a positive dial reading. Record the highest dial reading before the gel breaks. It may be necessary to turn the handwheel through quite a large angle before the gel breaks so, before starting, position the hand so that the necessary rotation can be achieved without undue difficulty. As this test is quick, it should be done several times until a repeatable value is obtained.

(vi) The ten minute gel strength is obtained in the same way as the ten second gel strength except that the slurry must be left undisturbed for ten minutes. Take great care when taking this reading so as to avoid having to repeat it.

9.3.2 Test procedure for the hand cranked viscometer

The test procedure for the hand cranked viscometer is very similar to that for the electrically driven version. The speed is controlled by a gear shift lever. When this is turned fully clockwise, the 300 rpm speed is selected. 600 rpm is obtained by moving the lever anticlockwise one indent. When turned fully anticlockwise, a high stirring speed is obtained (the electrically driven instrument does not have this facility).

The manufacturer's recommended operating procedure is as follows:

To obtain the 300 and 600 rpm reading:

(i) Place a recently agitated sample in a suitable container and lower the instrument head until the rotor sleeve is immersed exactly to the scribed line. To hold the instrument in this position, tighten the lock screw on the left leg of the instrument. With the gear shift lever at the high speed setting, rotate the crank for about 15 seconds, move the lever to the 600 rpm position and continue cranking.

(ii) Wait for the dial reading to come to a steady value (the time required depends on sample characteristics). This is the high speed reading (600 rpm). Turn the gear shift

© Federation of Piling Specialists – January 2006 (2nd edition)
(first published April 2000)

lever fully clockwise, crank and wait for the dial reading to come to a steady value. This is the low speed reading (300 rpm).

To obtain the gel strength:

(i) Stir a sample at the highest speed for about 15 seconds.

(ii) Allow the desired rest time (10 seconds or 10 minutes) and then turn the gel strength knob on the hub of the speed change lever clockwise, slowly and steadily. The maximum deflection of the dial before the gel breaks is the gel strength in lb/100 ft^2.

N.B. When the gel strength knob is turned, the crank also turns. This may prevent sufficient rotation of the knob unless the crank is initially well clear of the knob. To ensure that this is so, it is best to always finish cranking with the crank at the "10 o'clock" position. Also, as in Section 9.3.1 (v), position the hand before taking a reading so that it can be obtained without undue difficulty.

9.3.3 Checking viscometers

The instruments should be checked at regular intervals to ensure that the speeds are correct. This is best done with a stroboscope. If a 60 cycles/sec lighting supply is available, then the drilled holes in the top of the rotor can be used. If only a 50 cycles/sec light is available, the strobe effect can be obtained by fitting a ring of paper, marked with 10 equally spaced dots, over the rotor. The dots should appear stationary (or very slowly moving) at both 600 rpm and 300 rpm when there is a sample in the cup (this slows the rotation very slightly). If the speeds are not correct, the instrument must be recalibrated. Caution: if the cover of the instrument is taken off (in particular, if the gel strength knob is removed), it is very likely that the speed calibration will be disturbed.

9.3.4 Calculation of results

The Fann viscometer is designed so that, for the test sample:

(i) Apparent viscosity in centipoise (cP) = 600 reading/2
(ii) Plastic viscosity in cP = 600 reading - 300 reading
(iii) Gel strength (10 sec or 10 min) in lb/100 ft^2 = dial reading. (lb/100 ft^2 is a unit used in the oil industry. To convert to N/m^2 multiply the dial reading by 0.48.)

For completeness note that:

(i) Yield value in lb/100 ft^2 = (2 x 300 reading - 600 reading)
(ii) The yield value is the extrapolation of the line passing through the 600 and 300 points on to the shear stress axis of a plot of shear stress against rotational speed. In contrast, gel strength is the stress necessary to cause flow in a slurry which is at rest. For an ideal Bingham fluid, the yield value and gel strength would be equal.

© Federation of Piling Specialists – January 2006 (2nd edition)
(first published April 2000)

Bentonite slurries are not ideal Bingham fluids, and they also show thixotropy. As a result, the yield value will not be equal to the gel strength (either 10 second or 10 minute). The yield value is seldom used in civil engineering.

For thick slurries, there may be doubt as to whether the slurry has fully penetrated the narrow annular gap between rotor and bob of the instrument (the gap is only 0.59 mm). Results for such slurries should be viewed with caution.

9.4 Flow cones

The Fann viscometer is an expensive instrument and must be used with care by a trained operator if reliable results are to be obtained. In the laboratory, the detailed information that can be obtained from it can be invaluable in the investigation of different slurry systems, treatment chemicals, etc. However, there is often a need for a simple test which can be used for compliance testing at mixers, the trench side, etc. In general some form of flow cone is used. For excavation slurries the most common cone is the Marsh funnel. However, there is a wide variety of different cones, and it is important that the type of cone is specified when reporting results. The following data should be specified:

(i) The outlet diameter of the funnel spigot
(ii) The volume of slurry to fill the cone
(iii) The test volume to be discharged (this may not be the full volume of the cone)
(iv) The flow time for water

Test procedures are similar for all cones, therefore only the procedure for the Marsh funnel is detailed.

9.4.1 The Marsh funnel

The Marsh funnel, as shown in Figure 5, is the simplest instrument for routine checking of slurry viscosity. The test procedure is as follows:

(i) Clean and dry the funnel.
(ii) Hold the funnel upright with a finger over the outlet spigot.
(iii) Pour a freshly stirred sample of the slurry through the screen to fill the funnel to the underside of the screen (a volume of 1.5 litres).

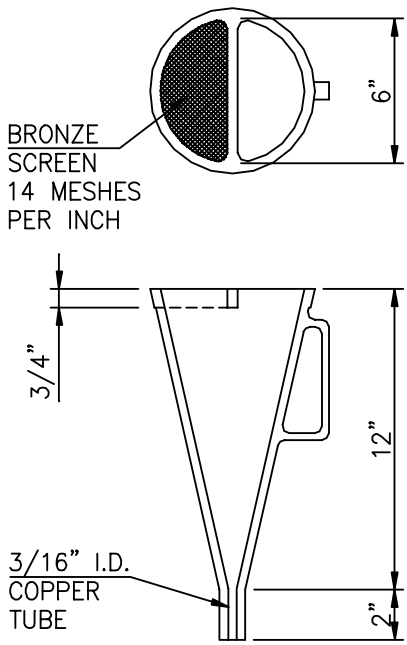

Fig. 5 Marsh funnel

© Federation of Piling Specialists – January 2006 (2nd edition)
(first published April 2000)

(iv) Immediately the funnel is full, keeping the funnel upright, remove the finger and allow the slurry to flow into a graduated receiver. Record the time for the flow of one US quart (946 ml). The volume discharged should also be quoted.

It is necessary to record the volume discharged, as the specification for the instrument also allows a discharge volume of 1000 ml.

The funnel may be checked by measuring the flow time for water. For clean water at 21°C (70°F), the times should be as follows:

25.5 to 26.5 seconds for 946 ml
27.5 to 28.5 seconds for 1000 ml

No adjustment of the funnel is possible, and if readings outside the above ranges are obtained, it must be assumed that the funnel (or the stopwatch) is damaged or that the funnel has not been properly cleaned. Solids can build up around the discharge orifice and constrict the flow. Clogging of the discharge orifice may be particularly severe if the funnel has been used previously for polymer based slurries. In this case, it may be necessary to immerse the cone in a chemical polymer breaking agent (e.g. bleach).

The Marsh funnel is suitable for testing most bentonite slurries.

9.5 The Shearometer

The Shearometer is an instrument that is no longer in common use for the testing of excavation slurries. The instrument is designed to measure the gel strength of slurries but gives results which tend to be markedly lower than those from the Fann viscometer. When reading older publications quoting slurry gel strength results, it may be necessary to consider whether the Shearometer or Fann viscometer was used.

The instrument consists of a duraluminum tube, 3.5 inches long, 1.4 inches internal diameter weighing 5 grams, and a stainless steel cup, mounted within which is a vertical scale graduated in lb/100 ft^2. To carry out a test, the cup is filled to the zero line of the scale with a freshly agitated sample of the slurry. The duraluminum tube is then wetted and the excess water wiped off. The tube is placed over the scale, lowered to the slurry surface and released at the appropriate test time (ten seconds or ten minutes). After allowing the tube to sink for one minute, the scale should be read directly opposite the top of the tube. If the tube sinks completely, the time it takes to sink should be recorded.

The lowest scale division of the instrument is 3 lb/100 ft^2 (1.4 N/m^2). Some specifications use this figure for the lower limit of gel strength - i.e. it would seem that the slurry is deemed acceptable if it gives a reading on the scale of the instrument. As the instrument was designed to test bentonite slurries, this is not unreasonable.

© Federation of Piling Specialists – January 2006 (2nd edition)
(first published April 2000)

9.6 pH

pH is a measure of acidity or alkalinity. pH 7 is neutral, below 7 is acid and above 7 is alkaline. pH may be measured with a glass electrode and a matched millivolt meter or with pH papers. With an electrode, it should be possible to measure the pH of pure solutions to a repeatability better than 0.05 pH unit. It is necessary to calibrate the electrode with a buffer solution prior to use and, preferably, to check its operation using a second buffer solution.

By selecting narrow range pH papers it is, in theory, possible to measure pH to 0.1 unit. However, there can often be doubts about the indicated colour. When testing suspensions, to avoid masking the colour with deposited solids, apply the suspension to one side only of the paper and read the colour from the other.

9.6.1 Test procedure

A pH meter is a delicate instrument and must be treated with great care. The basic components of the instrument are an electrode (an electrical cell) and a millivolt meter. The electrode has a very fragile glass bulb as one element of the cell; the other element is normally a porous plug or wick connecting with a fluid inside the electrode.

Before use, the electrode should be checked to see that it is filled with liquid. A bottle of filling solution is provided with the instrument, and this (and only this) should be used to top up the electrode when necessary. The electrode should be stored in the electrode filling solution or distilled water when not in use. The manufacturer's instructions should be checked for precise details.

The instrument must be calibrated before use and, for this, a buffer solution is required. This is supplied either as a liquid or as a small sachet of powder that must be dissolved in a specified volume of distilled water (generally 100 ml). The calibration procedure is to pour some of the buffer solution into a small beaker and dip the electrode into it. The beaker should then be rotated gently so as to swirl the solution around the electrode. The meter should settle down to a steady reading within about a minute. Once the reading is steady, the meter should be adjusted so that it shows the pH of the buffer solution. If the meter has an adjustment for sample temperature, the temperature of the buffer solution should be measured prior to calibration and the control set to this temperature.

After calibration, the electrode should be washed in a stream of distilled water and gently dried with a tissue. The used buffer solution should not be returned to the stock bottle as there is always a risk of contamination. However, it should not be discarded immediately, as it can be used to make occasional rough checks on the calibration during testing, but it should be discarded at the end of the day and a new sample used for the following day's work.

Once calibrated, the controls on the pH meter must not be touched. In theory the calibration should hold good for some time but, in practice, when testing slurries, it can drift significantly and the response of the meter may become very sluggish. The reason for

© Federation of Piling Specialists – January 2006 (2nd edition)
(first published April 2000)

this seems to be that the electrodes have a rather short useful life. To prolong the life of an electrode, do not leave it standing in slurry for longer than necessary. Always wash off the slurry at the end of a test, and keep the number of tests to a minimum.

The actual test procedure for a slurry is as follows:

(i) Set the temperature control to the slurry temperature (if appropriate).

(ii) Dip the electrode into a beaker of the slurry.

(iii) Gently stir the slurry with the electrode until a steady recording is obtained.

(iv) Record the pH to the nearest 0.1 of a pH unit.

It should be noted that, if the electrode is left stationary in the slurry, a slightly different reading from that obtained as in (iii) may be indicated. This will not be the correct reading.

9.6.2 Typical pH values

Most fresh slurries made with bentonite which has been converted from the calcium form to the sodium form by the addition of sodium carbonate, will have a pH in the range 9.5 to 10.5. Used slurries, unless contaminated by cement, often have a slightly lower pH than their fresh counterparts. Processes which will contribute to this pH reduction include ion exchange of the sodium ions in the slurry with ions present on the natural clays in the ground, and reaction of any free sodium carbonate in the slurry with atmospheric carbon dioxide.

Natural sodium bentonites, such as Wyoming bentonite, can be of more nearly neutral pH. Cement contaminated slurries may have very high pH values of the order of 11.5 to 12.5.

pH may be used as a quality control parameter for the bentonite as delivered to site. For this, the pH of a slurry of fixed concentration (typically 5%) should be measured, though the variation of pH with concentration will be quite modest.

9.7 Filtrate loss

Filtrate loss (sometimes known as fluid loss), bleed, settlement and syneresis all represent segregation processes which may suggest slurry instability. Segregation of solid and liquid phases is a common theme and thus there may be common causes at the micro structural level. Slurries which show high values for any one parameter may show high values for the others.

The standard apparatus used for filtrate loss measurement is the American Petroleum Institute standard filter press, as shown in Figure 6. The instrument consists of a 3 inch diameter cell with a detachable base in which a filter paper, supported on a wire mesh, can be fitted. In the test, the volume of filtrate collected from a slurry sample, subjected to a pressure of 100 psi for 30 minutes, is measured.

© Federation of Piling Specialists – January 2006 (2nd edition)
(first published April 2000)

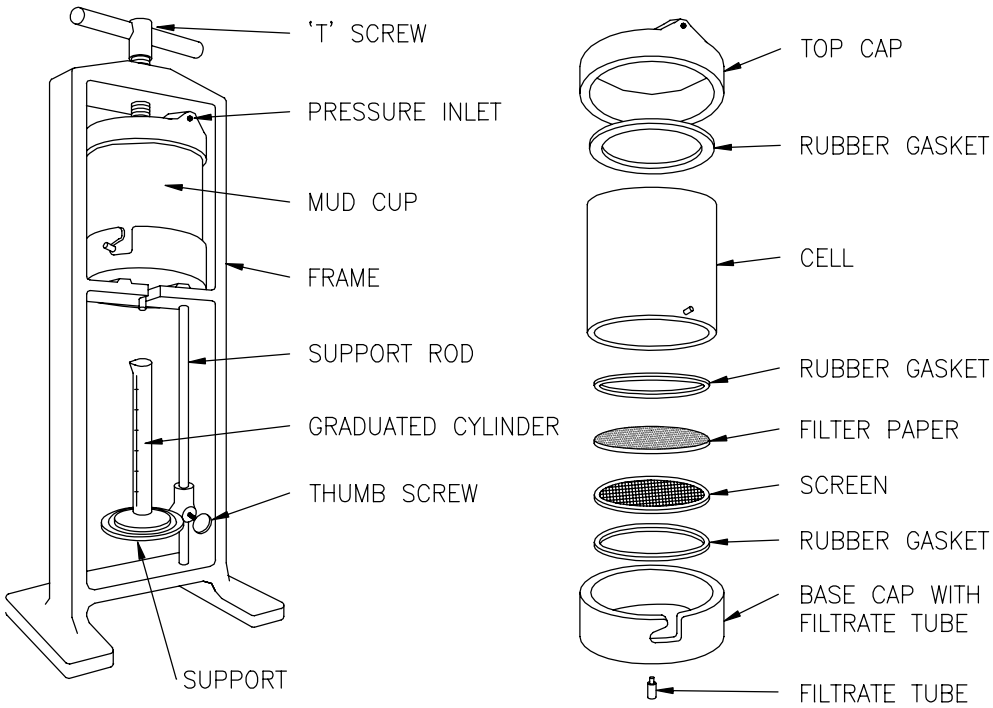

Fig. 6 Standard filter press

9.7.1 Test procedure

The test procedure for the standard Baroid instrument is as follows (the procedure for assembling other versions of the instrument may be slightly different):

(i) Assemble the dry parts in the following order: base cap, rubber gasket, screen, a sheet of filter paper, rubber gasket, and cell. Secure the cell to the base cap.

(ii) Fill the cell with the sample to be tested to within 6 mm of the top. Set the unit in place in the filter press frame.

(iii) Check the top cap to make sure the gasket is in place. Place the top cap on the cell and secure the unit in place with the T-screw.

(iv) Place a dry graduated cylinder under the filtrate tube.

(v) With the regulator T-screw at its maximum outward position (closed position), close the safety bleed valve. Apply 100 psi pressure to the filter cell by rapidly screwing the regulator T-screw inwards. The pressure should be applied in 30 seconds or less. A pressure in the range 95-105 psi is acceptable. Timing of the test should start at the time of pressure application.

© Federation of Piling Specialists – January 2006 (2nd edition)
(first published April 2000)

(vi) At the end of 30 minutes, record the volume of filtrate. Return the regulator T-screw to its maximum outward position. Open the safety bleed valve to release the cell pressure.

9.7.2 Test results

The volume of filtrate normally shows a linear relationship to the square root of time for which the sample is under pressure. That is:

$$V = m\, t^{0.5} \qquad (4)$$

where V is the volume of filtrate collected in time t, and m is a constant.

Thus, the filtrate volume at 7.5 minutes will be half that at 30 minutes. Some specifications may allow the test to be terminated after 7.5 minutes and the filtrate loss reported as twice the 7.5 minute value.

The test result is independent of the volume of slurry used in the test, provided that all the water is not expelled from the slurry within the test period If this occurs, gas will start to discharge from the filtrate tube. For some versions of the test cell, the pressure is provided by a small, disposable, carbon dioxide bulb. If such bulbs are used, the test cell should be filled with as much slurry as possible so as to minimise the amount of gas required.

Caution: If carbon dioxide ("Sparklet") bulbs are used to pressurise the cell, they must be stored away from direct sunlight or sources of heat.

9.8 Bleeding

Bleeding may be defined as the separation of water from the solids in a slurry, principally due to gravitational settlement of the solids. In bentonite slurries, bleeding will be effectively a self weight consolidation process which will continue until the slurry has sufficient strength to support its own weight, though there may be secondary effects (e.g. syneresis) which lead to continued separation of water over a very long time scale.

Bleeding of bentonite slurries should be small, once the slurry has been hydrated for about 24 hours. Severe bleeding in hydrated slurries normally suggests an incompatibility of the bentonite with the mix water. Normally, it should not be necessary to test or specify bleed for excavation slurries, though problems may occur if slurries are continually used and cleaned without regular topping up with fresh slurry.

9.9 Moisture content

As indicated in Section 9.1.1, density is a poor indicator of the bentonite content of fresh slurries. The density of such slurries is close to that of water, therefore quite precise measurements are necessary. Measurement of the moisture content of a fresh slurry can give much better resolution, though the test will take longer (typically at least 24 hours if a conventional oven is used).

© Federation of Piling Specialists – January 2006 (2nd edition)
(first published April 2000)

Generally the test procedure should follow that given in BS 1377: Part 2: 1990, except that fluid slurry should replace the soil. The quantity of slurry should be selected so that a reasonable weight of solids will be left after drying, which will depend on the resolution of the balance used for weighing. Typically, at least 100 grams of slurry should be dried.

It should be remembered that the bentonite used to prepare the slurry will include some moisture, therefore the moisture content of the bentonite powder used to prepare the slurry and that of the slurry should both be measured.

If the moisture content of the bentonite powder is m_c and that of the slurry is m_s (this may be of the order of 2000%), then the concentration, C of bentonite powder at moisture content m_c in the slurry (in kg/kg of water) is as follows:

$$C = (1 + m_c) / (m_s - m_c) \qquad (5)$$

It should be noted that, in most of the literature on bentonites, the moisture content is given as a percentage of the moist weight of the powder. In soil mechanics, moisture contents are calculated by oven dry weight. Thus, if m_m is the moisture content calculated as a percentage of the moist weight, the moisture content as a percentage of oven dry weight, m_c is:

$$m_c = m_m / (100 - m_m) \qquad (6)$$

9.10 Water compatibility testing

In general, potable water from a mains supply has been found suitable for the preparation of bentonite slurries. In contrast, water from untreated sources such as lakes and streams may not be acceptable.

Water containing significant quantities of dissolved salts can inhibit proper dispersion of the bentonite. The levels at which dissolved ions inhibit dispersion vary with the type and source of the bentonite which is generally more sensitive to cations than anions. Magnesium is often the most sensitive ion and may begin to inhibit dispersion at levels greater than about 50 mg/litre. Calcium may inhibit dispersion at levels greater than about 250 mg/litre.

If chemical analyses are to be carried out on the water it is suggested that the following ions are determined:

- Cations: sodium, calcium, magnesium and potassium
- Anions: chloride, sulphate and bicarbonate

pH and electrical conductivity should also be measured.

On the basis of the anion and cation analyses, an anion/cation balance should be undertaken. If there is a significant imbalance, or other ions are known or expected to be present, a fuller analysis may be necessary.

© Federation of Piling Specialists – January 2006 (2nd edition)
(first published April 2000)

It is difficult to predict whether a water is suitable from chemistry alone. Therefore, if there is any doubt about the water, and particularly if non-mains water is to be used, hydration trials should be undertaken. These should take the form of a full investigation of bleeding, rheology and filtrate loss, etc. carried out on bentonite slurries prepared with both distilled water and the test water. A simplified procedure could be based on bleed alone, as this can be a sensitive parameter. A possible procedure could be as follows:

- A slurry consisting of the bentonite and the proposed mix water for the site should be prepared.
- If there is any significant bleed at 24 hours and at 48 hours (after re-mixing), the mix water should be considered unsuitable for use, and an alternative source of water sought.

10 Bibliography

Boyes, R.G.H., Structural and Cut-off Diaphragm Walls, Applied Science Publishers, 1975.

Federation of Piling Specialists, modifications (1977) to Specification for Cast-in-Place Concrete Diaphragm Walling (published 1973) and Specification for Cast-in-Place Piles Formed Under Bentonite Suspension (published 1975).

Hajnal, I., Marton, J. and Regele, Z., Construction of Diaphragm Walls, Wiley, 1984.

Hodgson, F.T., Design and control of bentonite/clay suspensions and concrete in diaphragm wall construction, in A Review of Diaphragm Walls, Institution of Civil Engineers, 1977, pp 79-85

Hutchinson, M.T., Daw, G.P., Shotton, P.G. and James, A.N., The properties of bentonite slurries used in diaphragm walling and their control, Conference on diaphragm walls and anchorages, Institution of Civil Engineers, 1975, p33-40

Jefferis, S.A., Effects of mixing on bentonite slurries and grouts, ASCE specialty conference on grouting in Geotechnical Engineering, New Orleans, 1982 pp 62-76.

Jefferis, S.A., Slurries and Grouts, in the Construction Materials Reference Book, Doran, D.K., Editor, Butterworths, 1992.

Rogers, W.F., Composition and Properties of Oil Well Drilling Fluids, 5th Edition, Gulf Publishing, 1988.

Xanthakos, P.P., Slurry Walls, McGraw Hill, 1979.

© Federation of Piling Specialists – January 2006 (2nd edition)
(first published April 2000)